J. Binding

1. Double Loop Wire Binding

Double loop wire binding consists of a series of double wire loops from a continuous pre-formed wire, which are inserted into pages that have been punched with square or round holes. The loops of the wire are held opened by a machine to allow the pages to be inserted over the loops. Once the loops are closed, extra pages cannot be added. Double loop wire binding is more expensive than plastic combs or spiral binding, but it is more attractive and long lasting. When books with this type of binding are open, the pages will lie flat and the pages can be folded over completely. Double loop wire works best for books of one-inch thickness or less. Many technical manuals and cookbooks have this type of binding and they are very popular among architects. Double loop wire binding is also known as "Wire-O-Binding", which is a brand name for this type of binding. Listed below are the types of wire available.

a. *3:1 Wire* - With this wire, the paper is punched 3 holes per inch, which is 32 holes per standard 11" sheet size. It is available in sizes ranging from 3/16" up to 9/16" in diameter. It has the best appearance of all double loop wire.
b. *2:1 Wire* - Pages are punched with 2 holes per inch or 21 holes per standard 11" sheet size. 2:1 wire is used for binding books that are too large for 3:1 wire and is available in sizes ranging from 5/8" to 1". The wire is more durable and sturdy than 3:1 wire.
c. *19 Loop* - The pages are punched with 19 rectangular holes per standard 11" sheet size and the wire comes in diameters ranging from 1/4" to 1". The wire is similar in appearance to 2:1 wire.

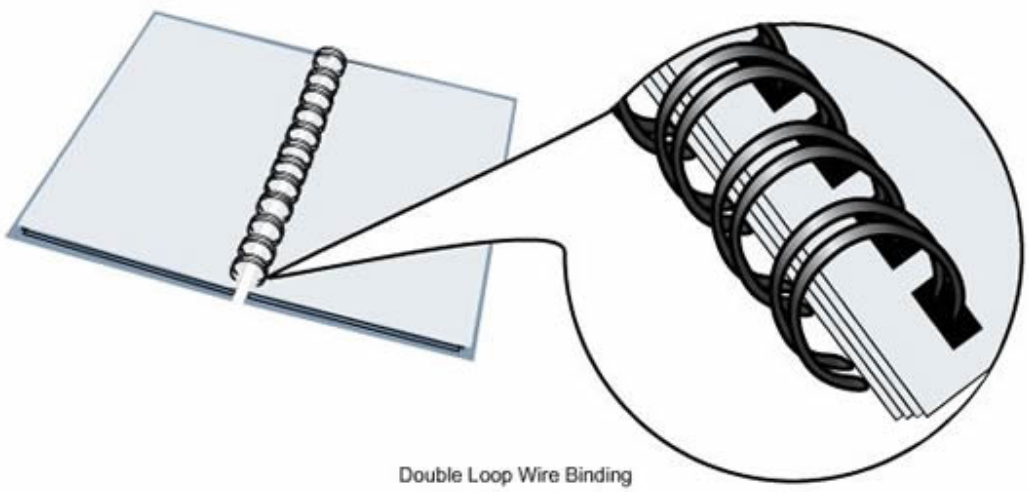

Diameter Guide for Double Loop Wire Binding
The examples below are based on booklets consisting of
20 lb. bond pages with heavy weight covers on the front and back.

Number of sheets	Approx. thickness including covers	Double loop diameter
45 (90 pages)	3/16"	1/4" (3:1 Wire)
60 (120 pages)	1/4"	5/16" (3:1 Wire)
75 (150 pages)	5/16"	3/8" (3:1 Wire)
90 (180 pages)	3/8"	7/16" (3:1 Wire)
105 (210 pages)	7/16"	1/2" (3:1 Wire)
120 (240 pages)	1/2"	9/16" (3:1 Wire)
135 (270 pages)	9/16"	5/8" (2:1 Wire)
160 (320 pages)	5/8"	3/4" (2:1 Wire)
190 (380 pages)	3/4"	7/8" (2:1 Wire)
220 (440 pages)	7/8"	1" (2:1 Wire)

2. Loose Leaf

Loose Leaf Binding is one of the simplest methods of binding. Cut pages are punched with holes to accommodate the rings or posts contained in the binder. An advantage to both ring or post binders is that pages can be added or removed easily. The ring binder also has the advantage of allowing the pages to lie flat when the book is open, making it a good choice for technical or training manuals. An allowance for the inner margin (gutter) must be made to allow for the holes that are punched in the pages.

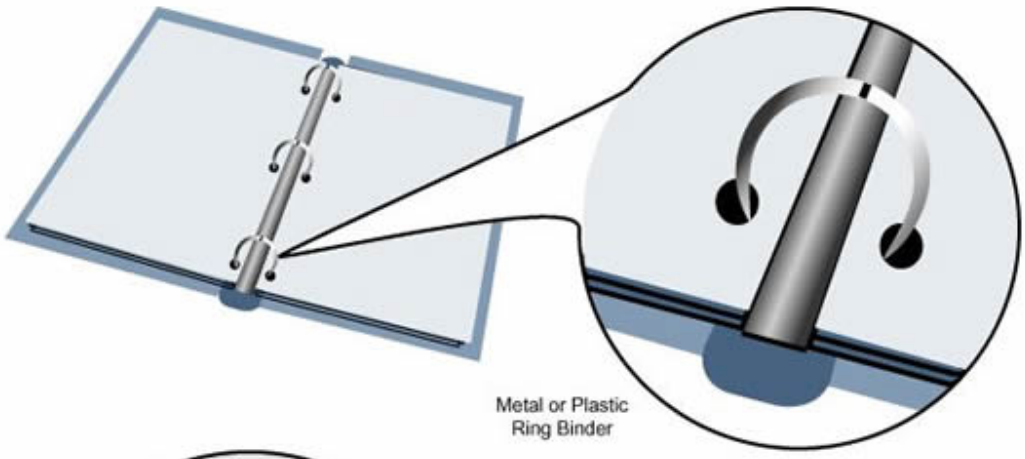

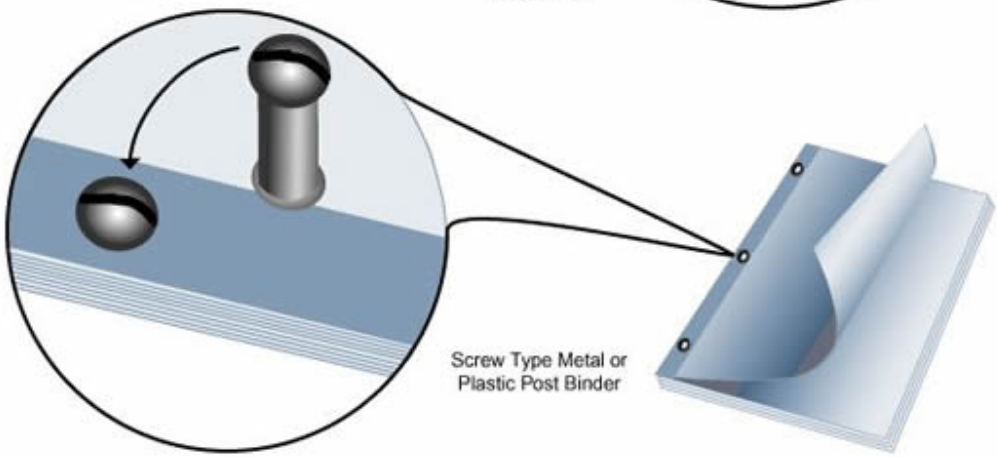

3. Post Bind
Binds a group of loose leaf sheets using a screw and post inserted through the holes that are punched in the sheets

4. Perfect binding

Perfect binding is one of the most commonly used binding methods. It is used for many types of publications including magazines, catalogs, paperback books, and telephone directories. Pages for a perfect bound publication are gathered, stacked, and placed in special equipment where the binding edge is covered with glue. A cover is then attached to the book to complete the process. Perfect binding is most successful when the paper grain runs parallel with the spine of the book. Magazines and books may have the title and other information printed on the flat spine of the cover.

Perfect binding is one of the most automated of the binding methods, which makes it inexpensive and is a major reason for its popularity. It can be divided into three main categories: hot adhesive, cold adhesive, and thermal binding.

a. Hot Adhesive Perfect Binding

Hot glue is the most widely used of the perfect binding adhesives. Books are usually 1/4" up to 2 1/4" thick depending on the thickness of the substrate. A major disadvantage with hot adhesive is that the book cannot lie flat when it is open. The binding will break if too much pressure is applied in attempting to make the book lie flat when it is open.

b. Cold Adhesive Perfect Binding

Cold glue is not used as often as hot glue because it is more expensive and requires more time to cure than hot glue, but it is stronger and more flexible. When the cold adhesive is used in conjunction with a scored and hinged cover, the book is able to lie flat when it is open without cracking the binding. Books with perfect bindings made with cold adhesive range in thickness from 1/8" to 2 1/4".

c. Thermal Binding

Thermal binding is similar to the hot adhesive method of perfect binding in that adhesive and heat are used to form the binding, but instead of hot glue, an adhesive strip is used. Pages are fed into a machine where an adhesive strip attached to a wrap around cover is applied to the binding edge of the pages. Heat is applied so that the adhesive strip and cover are adhered to the pages.

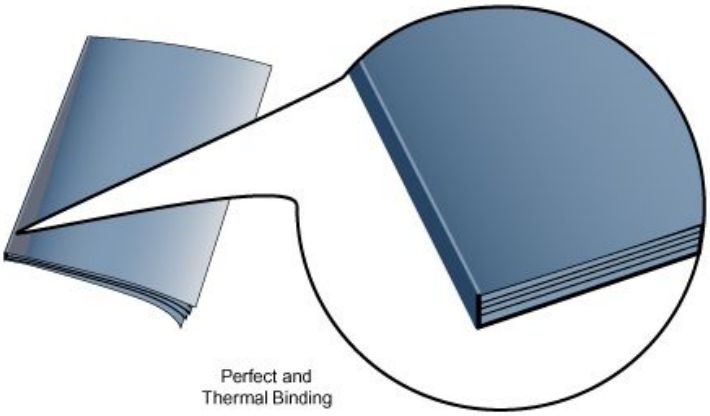

---

5. <u>Plastic Comb Binding</u>

Plastic combs are another binding method that allow for the addition or removal of pages from a book. The system involves punching rectangular holes into pages, which are then slid over the fingers of the plastic comb. A standard 11" sheet would have 19 holes punched into it. The plastic combs are durable and come in a variety of colors. Book titles or descriptions can be printed on the spine of the plastic comb so that the book can be identified when it is being stored. The plastic combs allow the book to lie flat when it is open, but the book cannot be completely folded over. Books up to 1 7/8" thick can be comb bound.

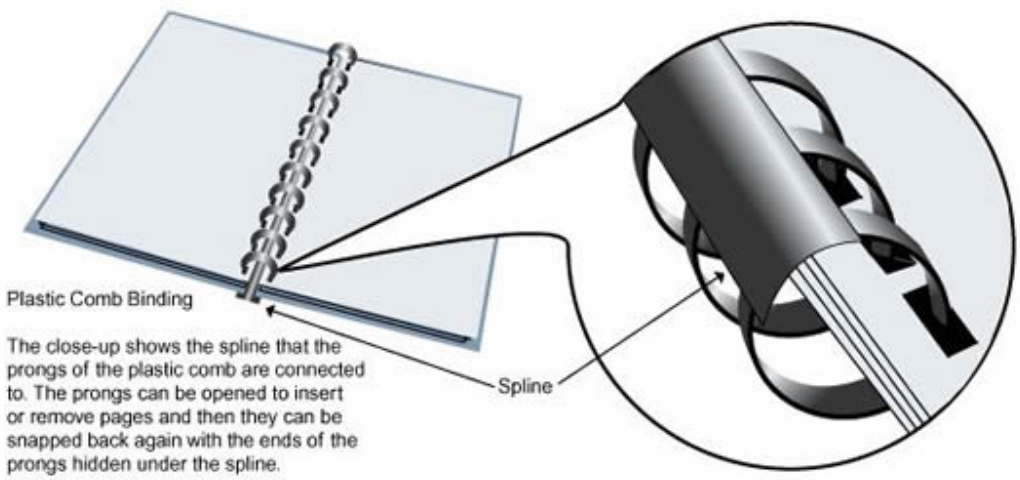

Diameter Guide for Comb Binding The examples below are based on booklets consisting of 20 lb. bond pages *without* covers. For booklets with covers, add 1/8" to the comb diameter.	
For the number of sheets shown on the left, use the comb diameter shown on the right.	
20 sheets (40 pages)	1/4"
40 sheets (80 pages)	5/16"
55 sheets (110 pages)	3/8"
70 sheets (140 pages)	7/16"
90 sheets (180 pages)	1/2"
100 sheets (200 pages)	9/16"
120 sheets (240 pages)	5/8"
150 sheets (300 pages)	3/4"
170 sheets (340 pages)	7/8"
200 sheets (400 pages)	1"
220 sheets (440 pages)	1-1/8"
230 sheets (460 pages)	1-1/4"
290 sheets (580 pages)	1-1/2"
360 sheets (720 pages)	1-3/4"
425 sheets (850 pages)	2"

6. Sewn Case Binding

Sewn case binding, also known as "edition binding", is the most expensive binding method, but is the most durable. It can be used for any book thickness, but the most common thicknesses range from 1/4" up to 3". A number of steps are required to complete a sewn case bound book, so the process is very automated.

1. A large printed sheet containing 16 or 32 individual book pages, called a signature, is cut apart, folded, and assembled in the correct page order.
2. The signature is sewn together with other signatures.
3. Endleave papers, which are usually made of heavier stock than the other pages of the book, are glued to the outside of the first and last signatures.
4. The book is trimmed on three sides.
5. The sewn edge (spine) of the book is coated with glue.
6. The spine of the book is rounded in a machine to allow the cover of the book to function properly when it is attached.
7. A strip of gauze is wrapped around the spine of the book.
8. The cases (covers) that will be used for the book are made from heavy board stock with its grain running parallel to the spine of the book to prevent warping of the cover. The heavy board cases are wrapped with embossed paper, cloth, plastic coated material, leather, or other materials to form the final covering.
9. The book is attached to its hard case/cover on a casing-in machine, which glues the endleave papers to the case.
10. The final step is to insert the book into a hydraulic press to ensure that it dries properly and does not warp.

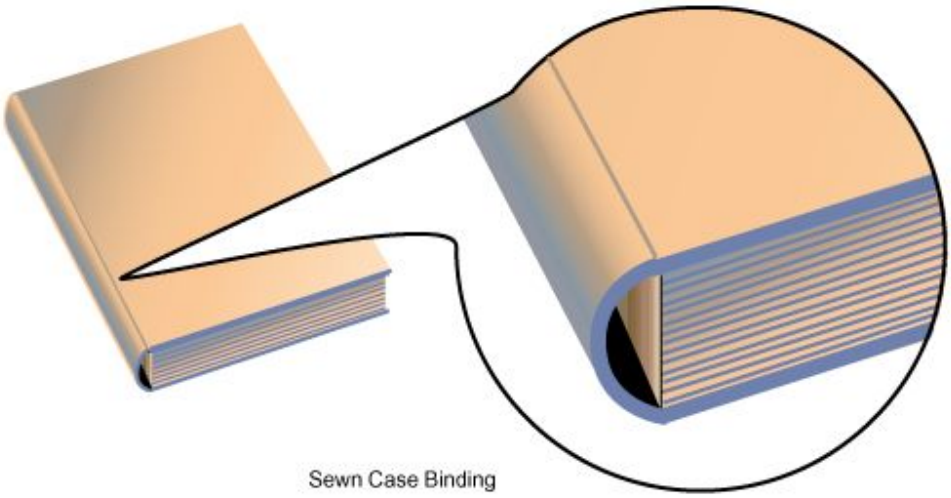

---

7. <u>Sewn Soft Cover</u>

Occasionally the pages of a book are attached to paperback or soft covers with the use of strong thread, which is sewn through the pages and cover using special equipment. This binding method is often preferred for technical manuals and textbooks, which may be

handled often by a number of people. It is more durable than perfect binding or wire binding where the overuse of a book may cause the binding to fail at a faster rate.

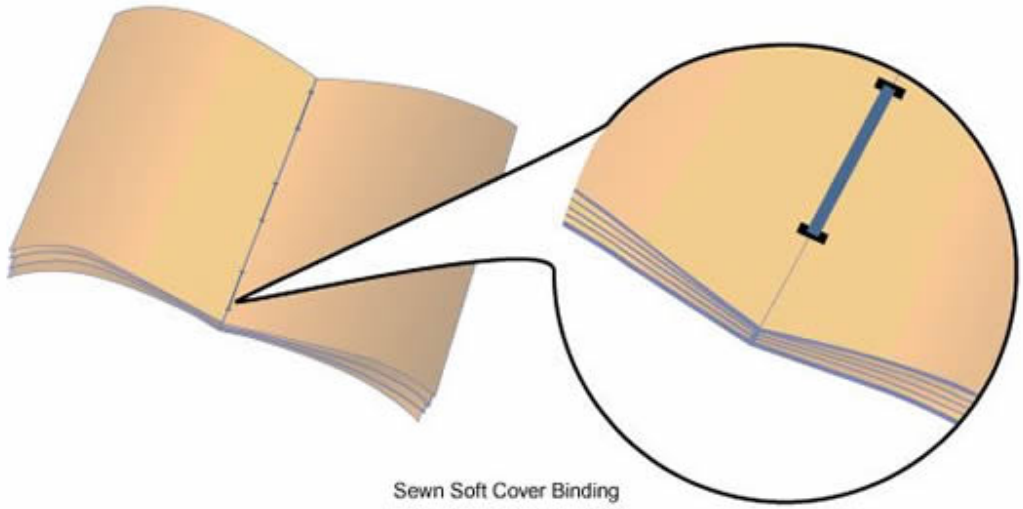

---

8. Spiral

A spiral binding consists of a continuous wire, which is coiled through evenly spaced holes that have been punched into the pages of a book. The spiral wire can be made of metal, plastic, or plastic coated metal. Plastic is available in a variety of colors, but the metal spiral has a limited color selection. When the books are open, the pages lie flat. The pages can also be folded over completely, which makes spiral binding a good choice for training manuals, cookbooks, notebooks, and calendars.

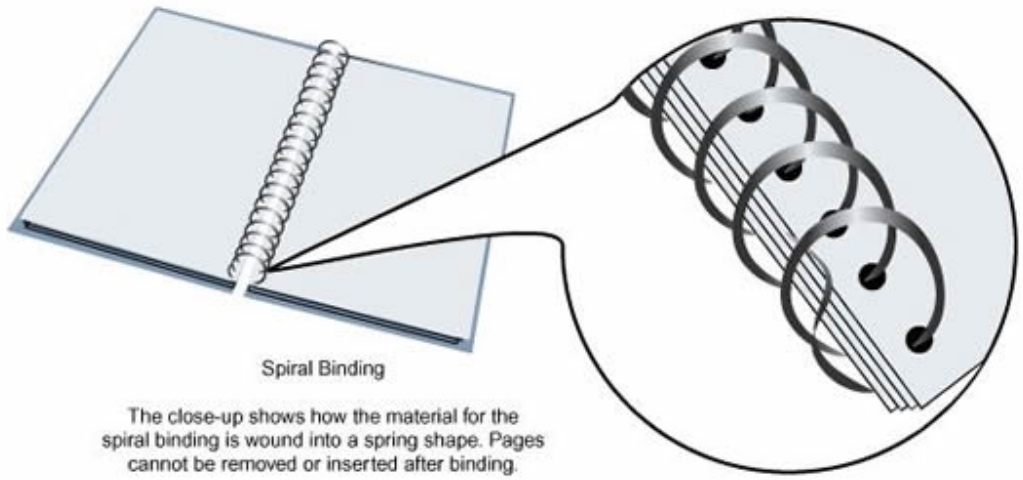

Diameter Guide for Spiral Binding
The examples below are based on booklets consisting of

20 lb. bond pages with heavy weight covers on the front and back.		
Number of sheets	Approx. thickness including covers	Coil diameter
30 (60 pages)	1/8"	6 mm
40 (80 pages)	5/32"	7 mm
50 (100 pages)	3/16"	8 mm
60 (120 pages)	7/32"	9 mm
70 (140 pages)	9/32"	10 mm
80 (160 pages)	5/16"	11 mm
90 (180 pages)	11/32"	12 mm
100 (200 pages)	3/8"	13 mm
110 (220 pages)	7/16"	14 mm
125 (250 pages)	1/2"	16 mm
140 (280 pages)	9/16"	18 mm
160 (320 pages)	5/8"	20 mm
180 (360 pages)	11/16"	22 mm
210 (420 pages)	13/16"	25 mm
230 (460 pages)	15/16"	28 mm
250 (500 pages)	1"	30 mm
265 (530 pages)	1-1/16"	32 mm

---

9. VeloBind®

There is only one manufacturer for this type of binding, so it is a trademarked brand name. Security strips are used for the binding of pages and it is most often used for legal documents and publications. The equipment used for this type of binding is expensive. Pages cannot be added or removed unless the security strip is cut.

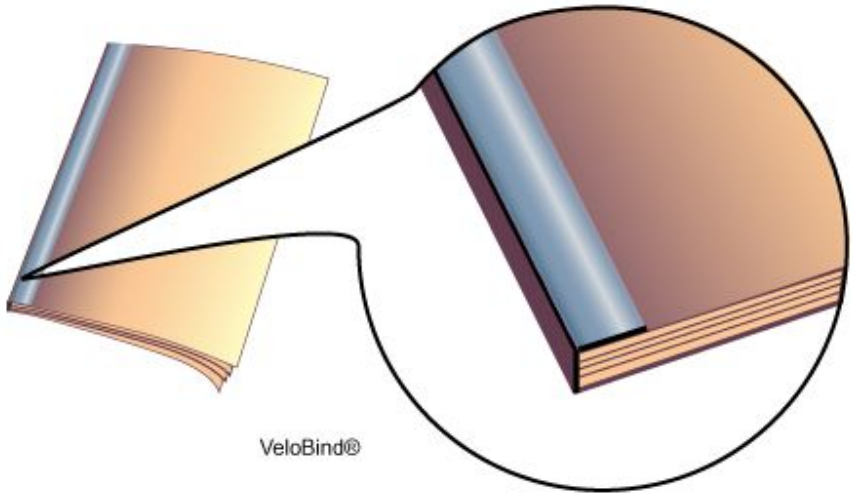

10. Wire Stitching

Wire stitching is divided into two categories: saddle wire and side wire stitching.

a. Saddle Wire

Saddle stitched books are constructed with sheets that are printed front and back that represent four pages of a book. The sheets of four pages are stacked with other sheets in the correct page order and then stapled along the fold line or saddle. The stapling is accomplished on equipment that cuts staples from a continuous roll of wire mounted on the machine and inserts them into the paper. Some machines can do the folding and stitching in one operation. Many booklet manufacturers use this multiple task equipment to increase efficiency.

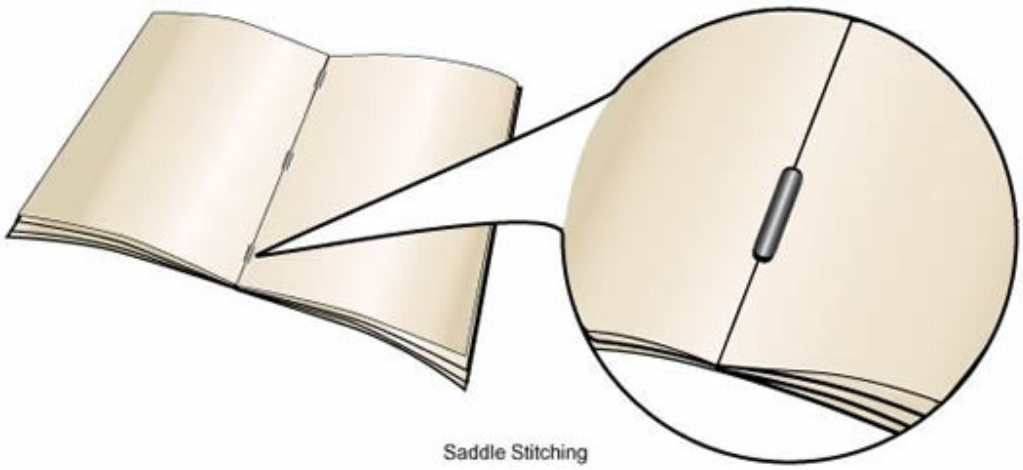

Common Cover Types

Two of the most popular types of covers used
for saddle stitched booklets are the standard cover and the self cover.

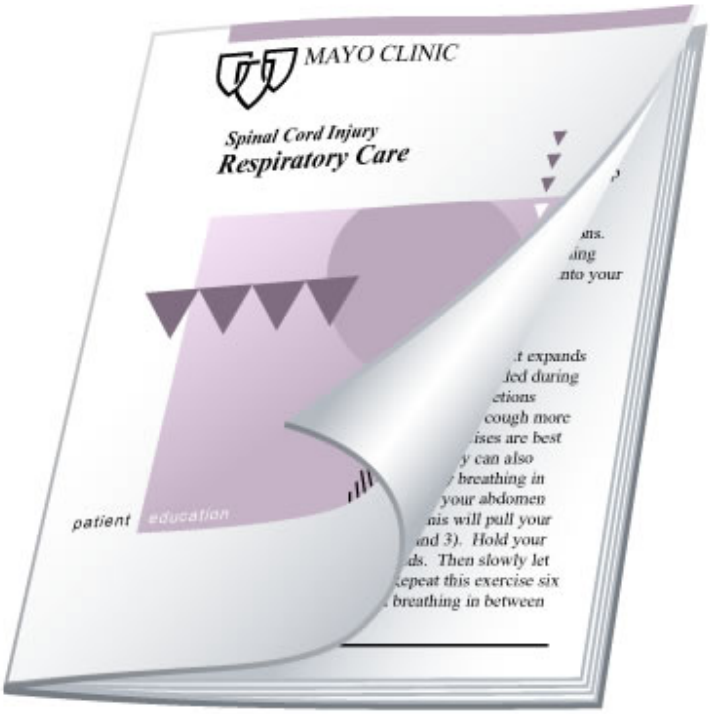

Standard Cover

The paper weight of the cover is heavier (thicker) than the pages inside. The inside of the cover is often unprinted, but occasionally it contains text and/or graphics.

Self Cover

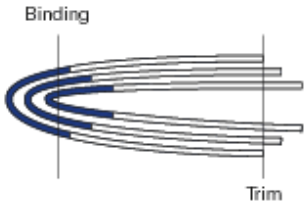

Creep

The paper used for the cover and the inside pages is the same. The inside of the cover is often printed with text and/or graphics, as are the inside pages, but occasionally the inside of the cover is unprinted.

Page "Creep"

Saddle stitched binding can work for volumes up to 128 pages (32 sheets, printed with 2 pages front and back) if the paper stock is thin enough, but it just isn't practical for anything larger. The larger the quantity of sheets that are saddle stitched, the greater the problem with a phenomenon called page "creep". Creep refers to the inner sheets sticking out further than those closer to the outside, because of the paper thickness. When the edges are trimmed flush after stitching, the width of the innermost sheet will be the shortest in the book, with each successive sheet being wider than the next one, working from the inside of the book to the outside. The printed area of each page will appear to get further from the outside margin, as you go from the inside of the book to the outside. To compensate for this, the pages are "shingled", which means that the inner margin, or "gutter", is increased on the pages working from the inside of the book to the outside. The gutter gets successively wider page-by-page. The outside page has the widest gutter and the inside page has the narrowest gutter. Increasing the gutter moves the printed area closer to the outside margin. When the pages of the book are trimmed flush, the printed copy appears to cover the same portion of each page. This procedure is not normally

performed on booklets with only a few pages because the effects of creep are minimal on publications with few pages.

b. Side Wire

With side wire stitching, staples are inserted into the pages in the inner margin. The staples are inserted from the front side of the book through the pages to the back. Side wire binding can be used when the book is too thick to be saddle stitched. Side wire binding does not allow the book to be opened flat and an extra allowance for the inner margin must be made to allow for the staples. Covers for these books are usually scored so that they can be opened easily and neatly. The binding area can also be covered with decorative tape not only to hide the staples, but to also provide added strength to the binding and make the book easier to handle (staples will not catch on other books).

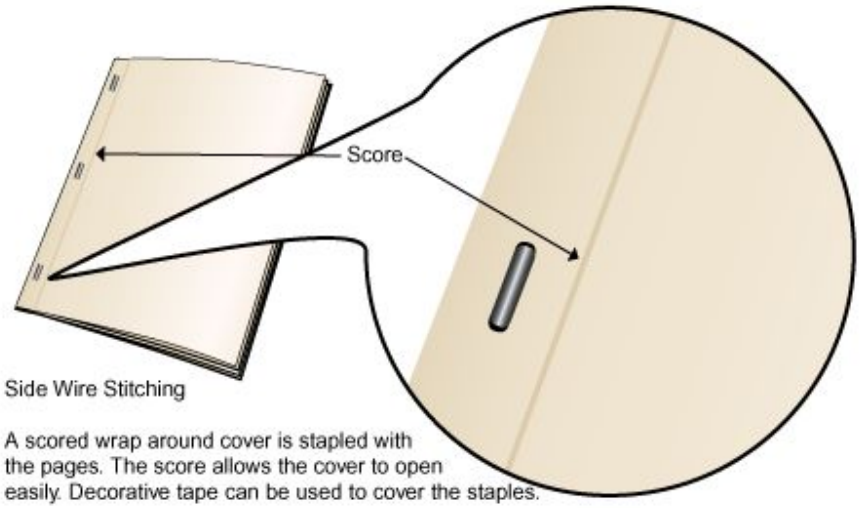

Side Wire Stitching

A scored wrap around cover is stapled with the pages. The score allows the cover to open easily. Decorative tape can be used to cover the staples.

Materials